ULTRA FOUNT 1

OVERALL DIMENSIONS

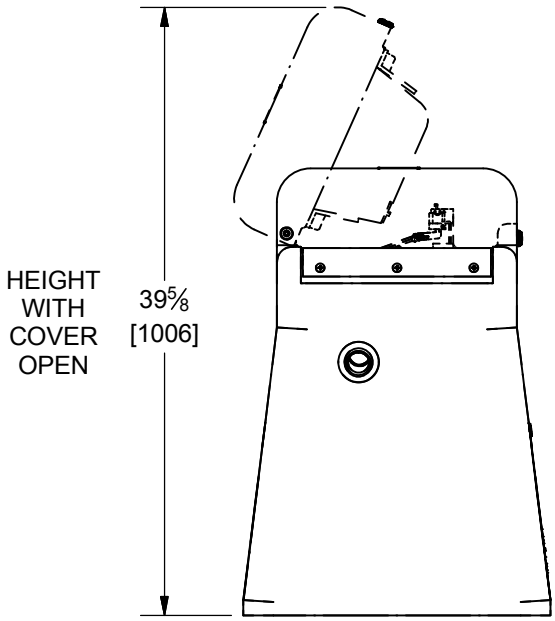

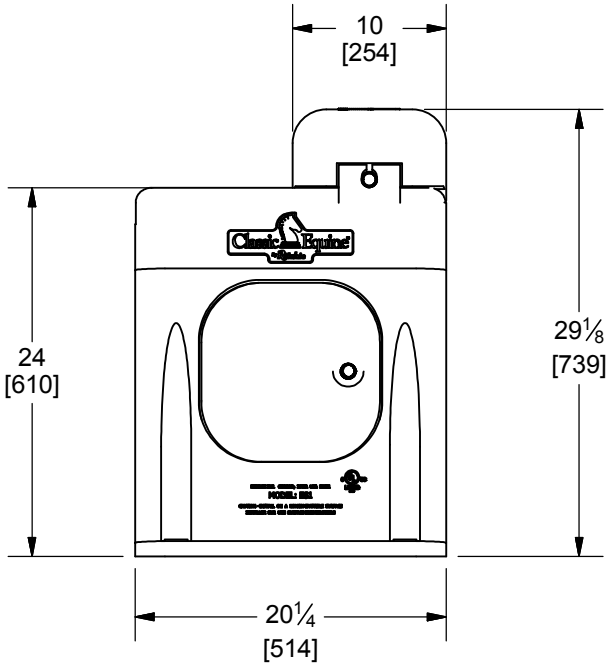

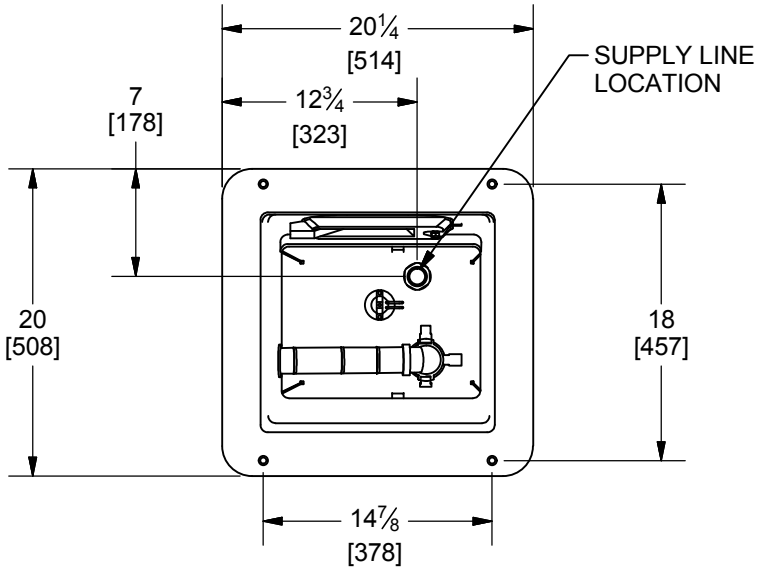

NOTE:

MOUNTING HOLE LOCATIONS ARE APPROXIMATE. DUE TO VARIATIONS IN MOLDING PROCESS IT IS NOT RECOMMENDED TO USE THIS DRAWING FOR CONCRETE ANCHOR LOCATIONS. IT IS RECOMMENDED TO WAIT UNTIL UNIT IS AVAILABLE FOR MEASUREMENT.

12/9/2018

18780_DIMS.dwg

TDU - Sheet: 1 of 1